ZONE	SYMBOL	REVISION	APPROVAL	DATE
		DWG. NO. TO REVISE	S.T.CHU	10-10-2003

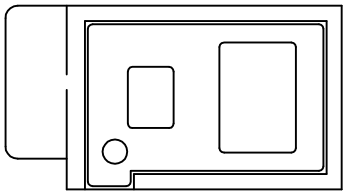

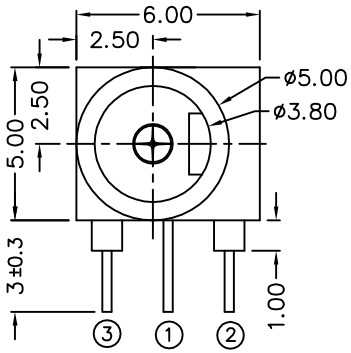

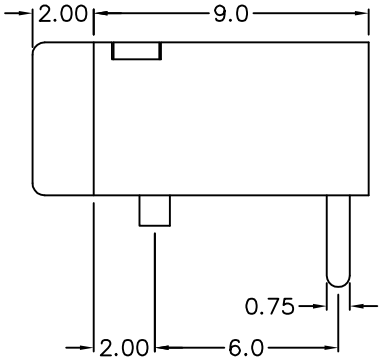

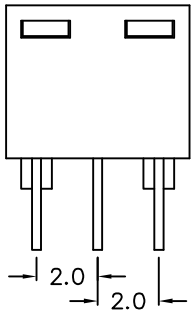

MODEL NO.	TDC-022
SCHEMATIC	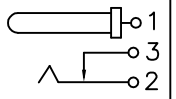
CENTER PIN	ø1mm
	ø1.3mm

* MATERIAL

TERMINAL 1 : BRASS
TERMINAL 2 : COPPER ALLOY
TERMINAL 3 : BRASS
HOUSING : PA66
COVER : PA66

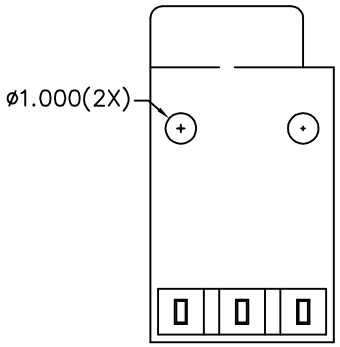

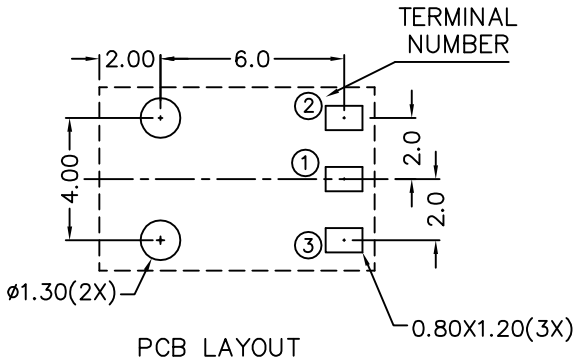

PCB LAYOUT
(BOTTOM VIEW)

SPECIFICATIONS

1 Insulation resistance of adjacent open terminals shall not be less than 50 Megohms when measured with 500 Volts resistance meter.
2 Connector shall withstand 500 Volts (RMS) between adjacent open terminal for one minute.
3 Contact resistance of normally closed terminals shall not exceed 0.03 ohms when measured at a current of one Ampere by Voltage drop method.
4 Connector shall withstand 5,000 cycles of insertions and withdrawal with testing plug , contact resistance shall not exceed 0.1 ohm.

PYEONG HWA ELECTRONICS CO.

				DESIGN	J.M.KWAN	DATE	10-10-2003	SCALE	4:1
				DRAWING	J.M.KWAN	DATE	10-10-2003	MATERIAL	*
PART NAME	DC POWER JACK	TOLERANCE UNLESS OTHERWISE SPECIFIED:	0.0±0.2 0.00±0.1 0.000±0.05	UNIT: mm	CHECK		DATE		DWG. NO.	TZ\DC022-PA66
PART NO.	MSJ-D022				APPROVAL		DATE		SHEET	

DCF-04/A